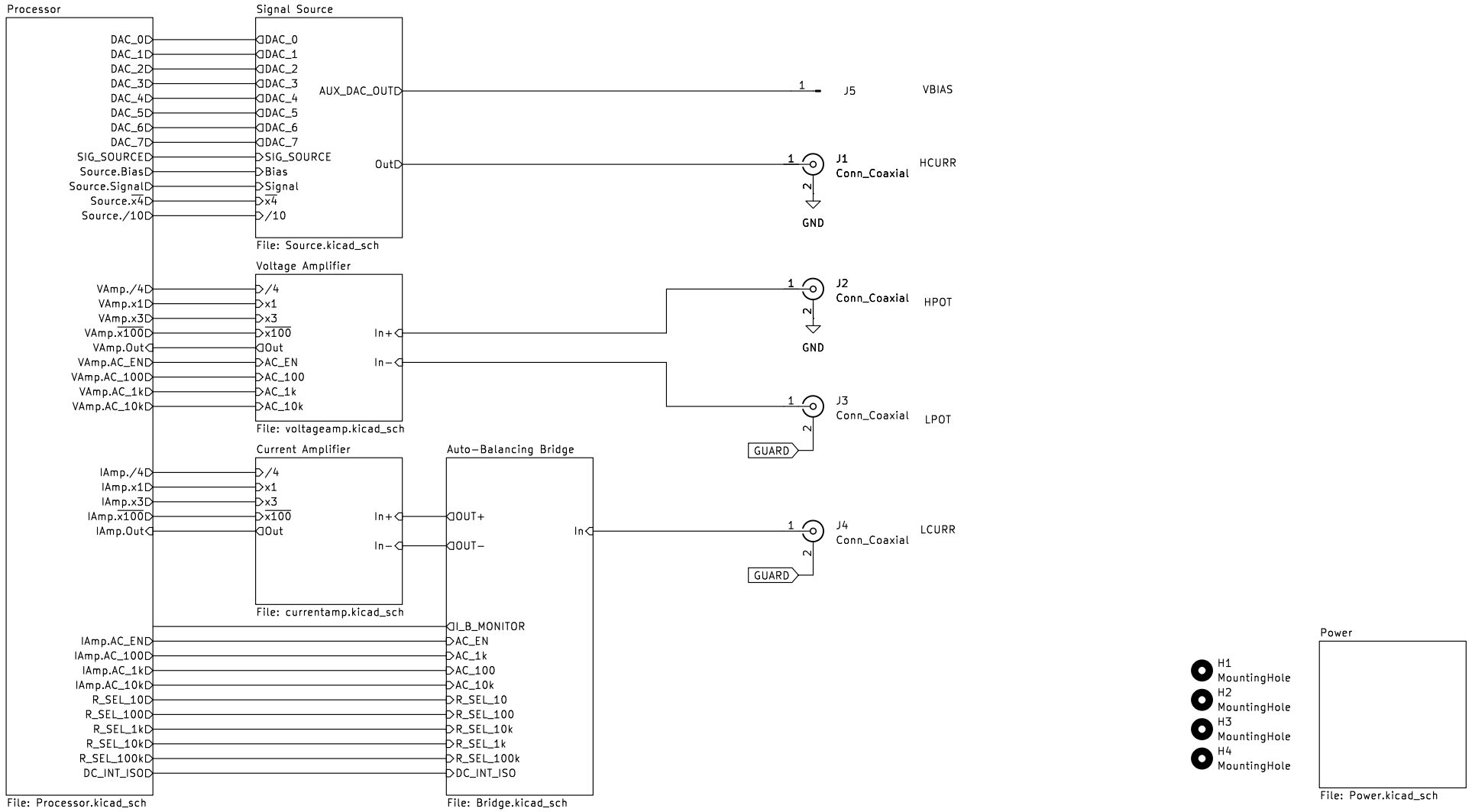

Harry and Yuki – EEE3 Instrumentation

Sheet: /
File: Main Board.kicad_sch

Title: Interconnect

Size: A4	Date: 2026-03-02	**Rev: 1.0**
KiCad E.D.A. 9.0.7		Id: 1/8

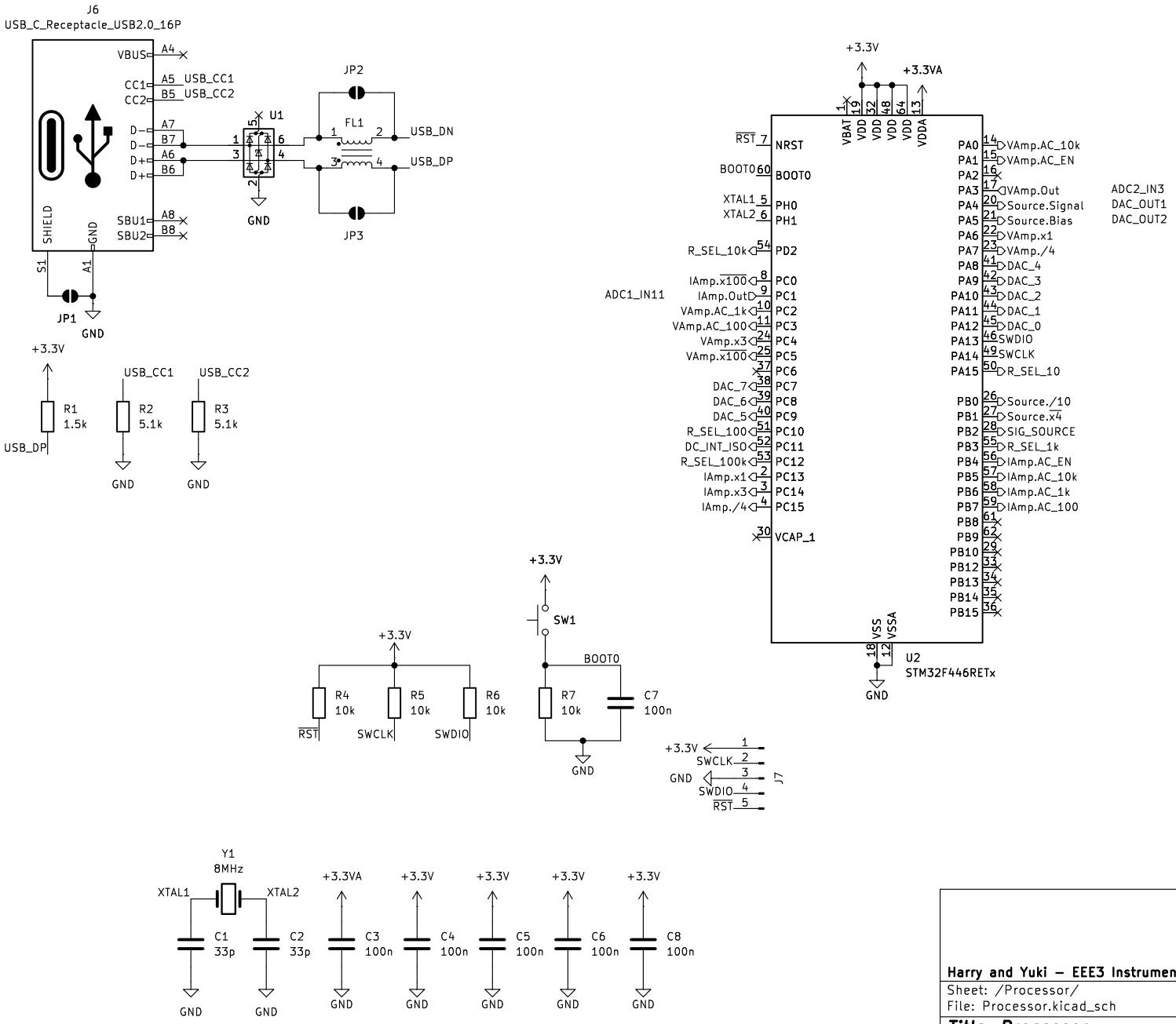

Harry and Yuki – EEE3 Instrumentation

Sheet: /Processor/

File: Processor.kicad_sch

Title: Processor

Size: A4	Date: 2026-03-02	**Rev: 1.0**
KiCad E.D.A. 9.0.7		Id: 2/8

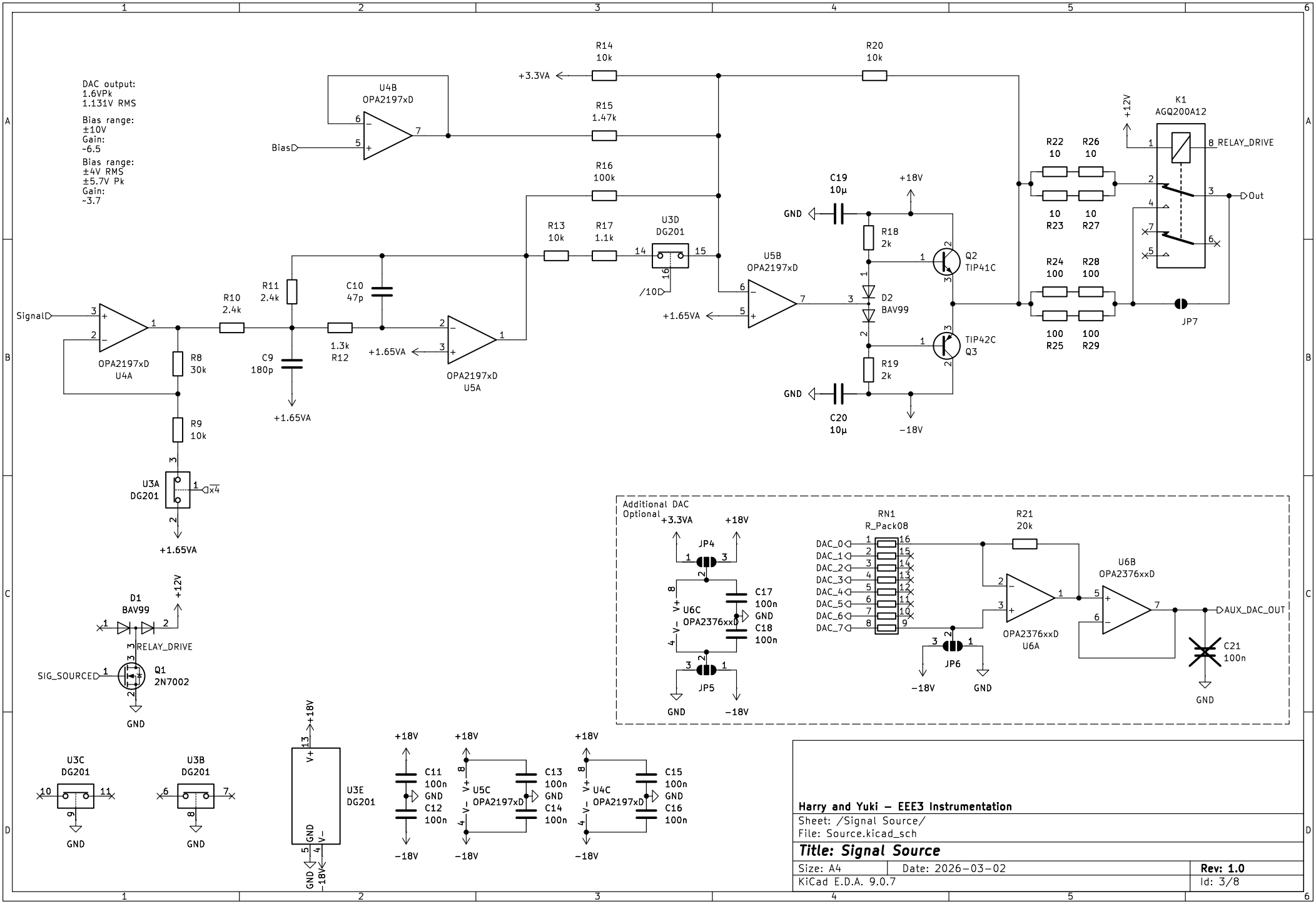

Harry and Yuki – EEE3 Instrumentation

Sheet: /Signal Source/
File: Source.kicad_sch

Title: Signal Source

Size: A4	Date: 2026-03-02	**Rev: 1.0**
KiCad E.D.A. 9.0.7		Id: 3/8

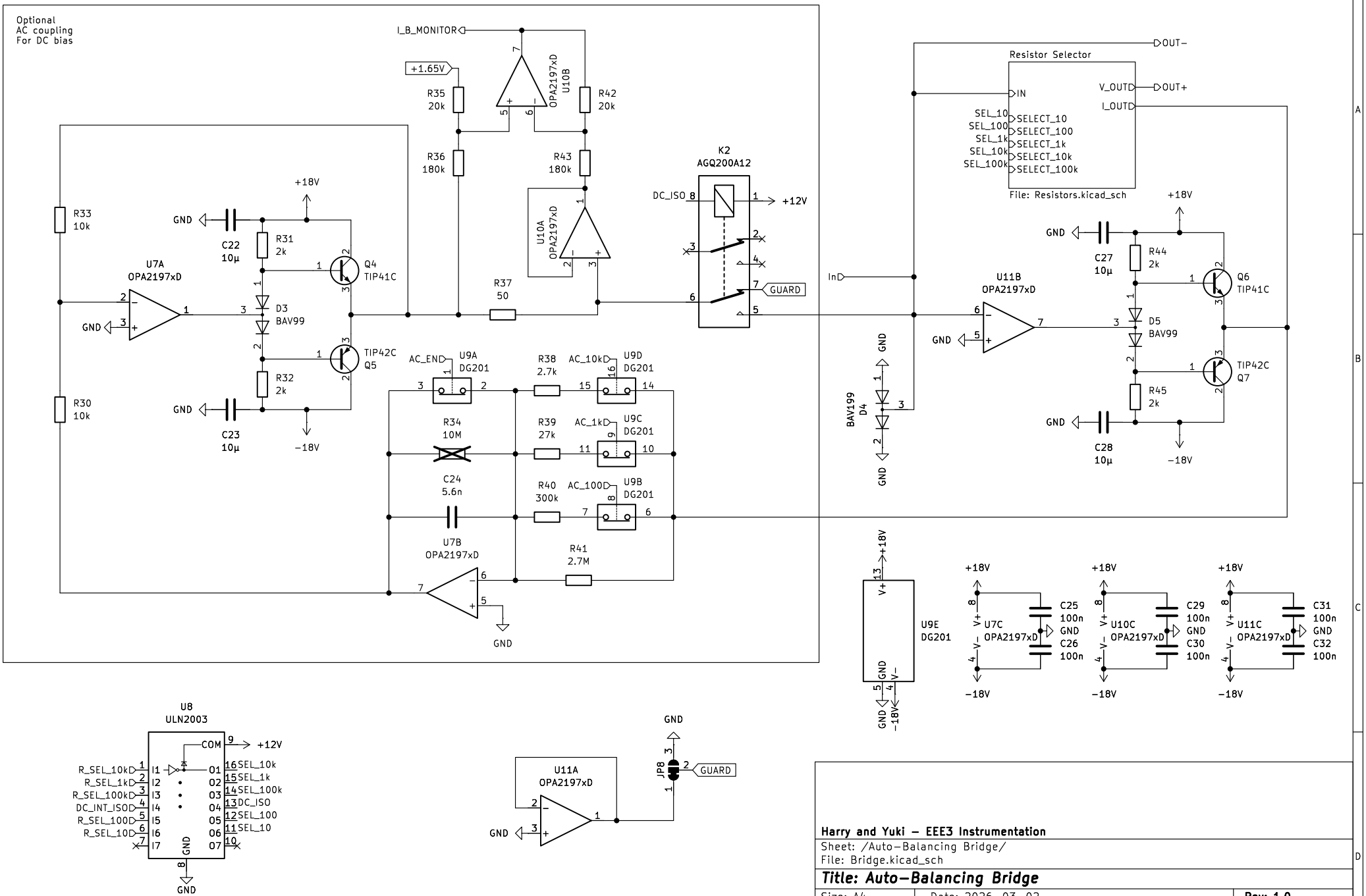

Harry and Yuki – EEE3 Instrumentation

Sheet: /Auto-Balancing Bridge/
File: Bridge.kicad_sch

Title: Auto-Balancing Bridge

Size: A4	Date: 2026-03-02	**Rev: 1.0**
KiCad E.D.A. 9.0.7		Id: 4/8

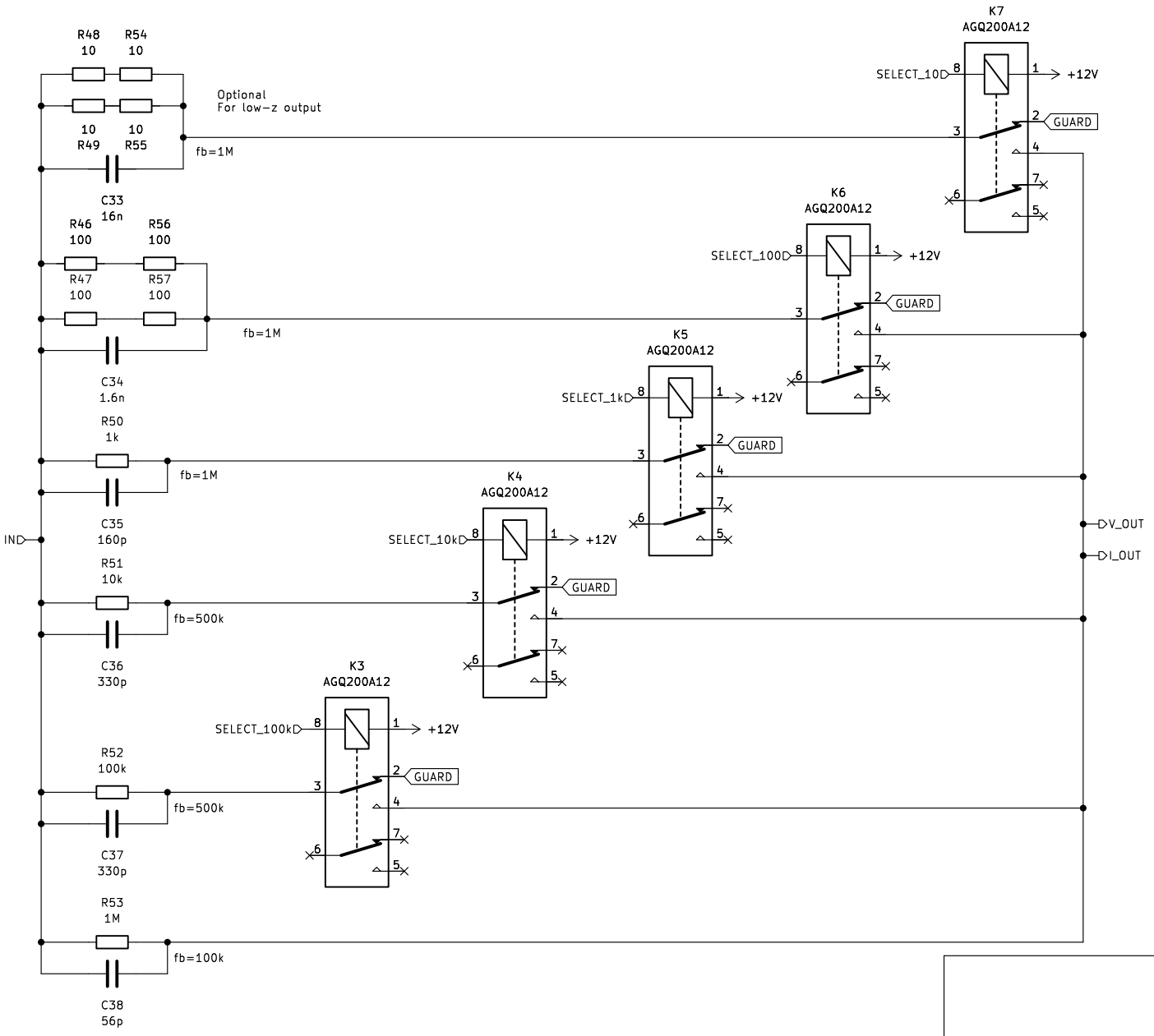

Harry and Yuki – EEE3 Instrumentation

Sheet: /Auto-Balancing Bridge/Resistor Selector/
File: Resistors.kicad_sch

Title: Resistor Selector

Size: A4	Date: 2026-03-02	**Rev: 1.0**
KiCad E.D.A. 9.0.7		Id: 5/8

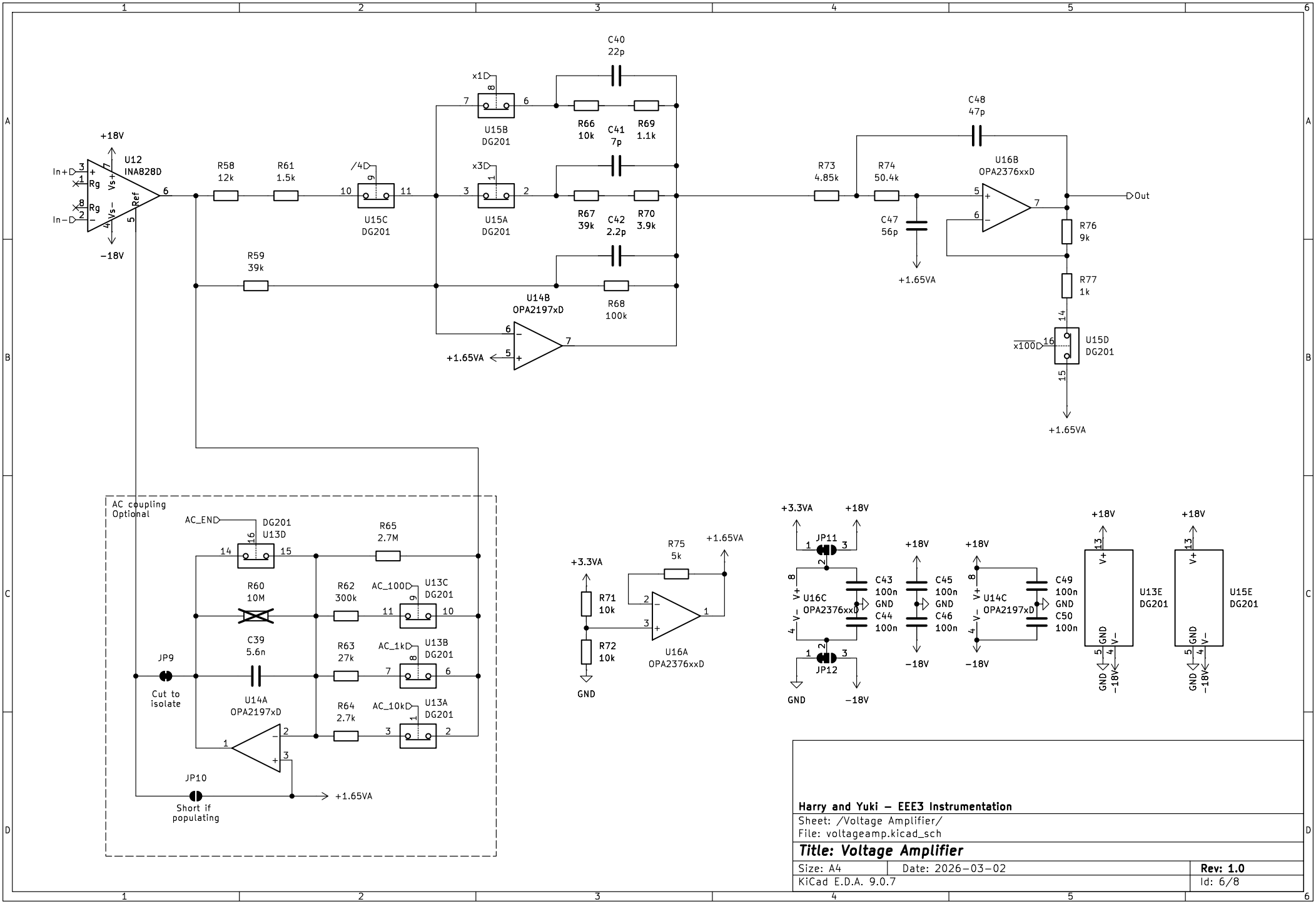

Harry and Yuki – EEE3 Instrumentation

Sheet: /Voltage Amplifier/

File: voltageamp.kicad_sch

Title: Voltage Amplifier

Size: A4	Date: 2026-03-02	**Rev: 1.0**
KiCad E.D.A. 9.0.7		Id: 6/8

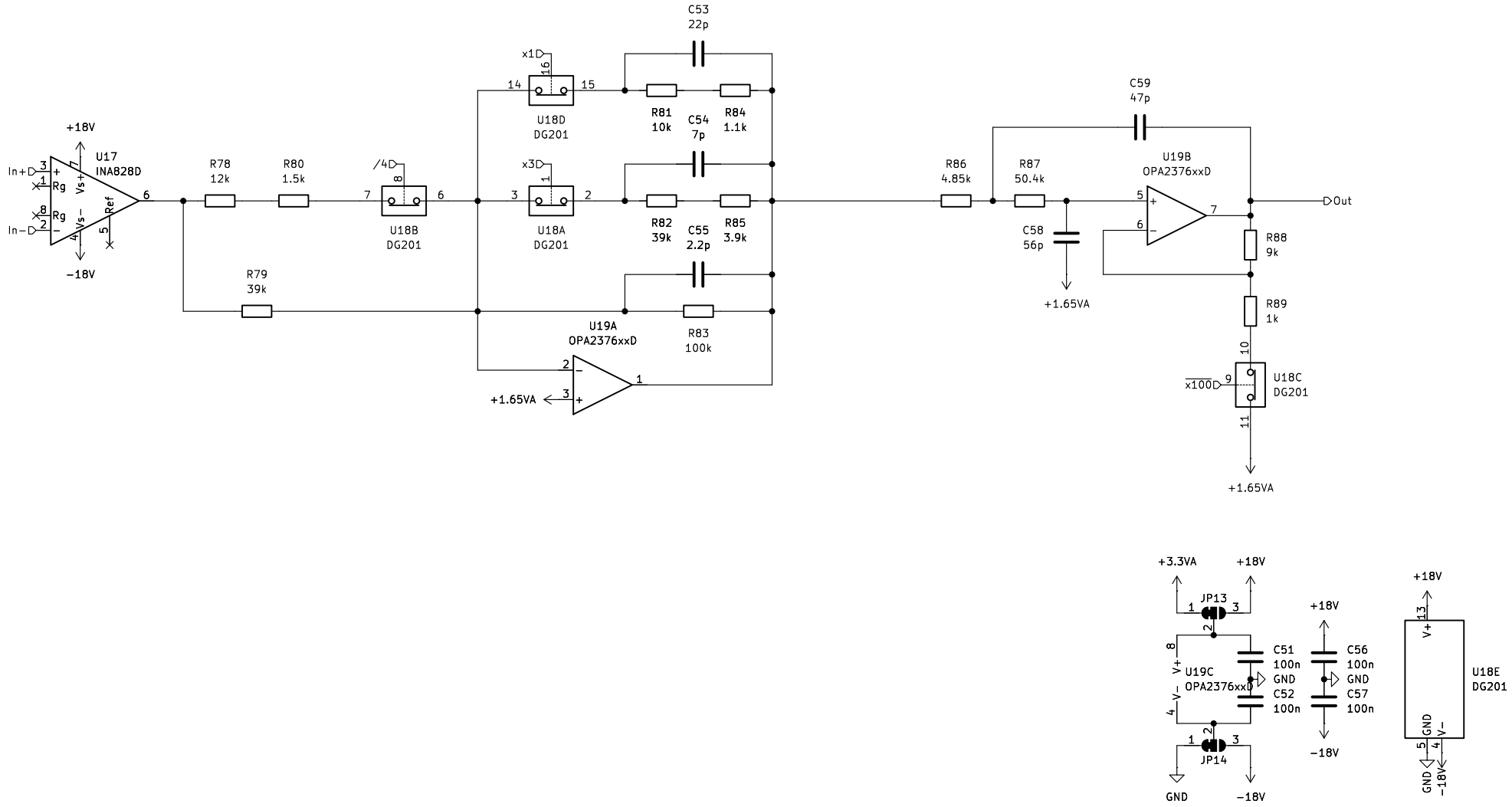

Harry and Yuki – EEE3 Instrumentation

Sheet: /Current Amplifier/
File: currentamp.kicad_sch

Title: Current Amplifier

Size: A4	Date: 2026-03-02	**Rev: 1.0**
KiCad E.D.A. 9.0.7		Id: 7/8

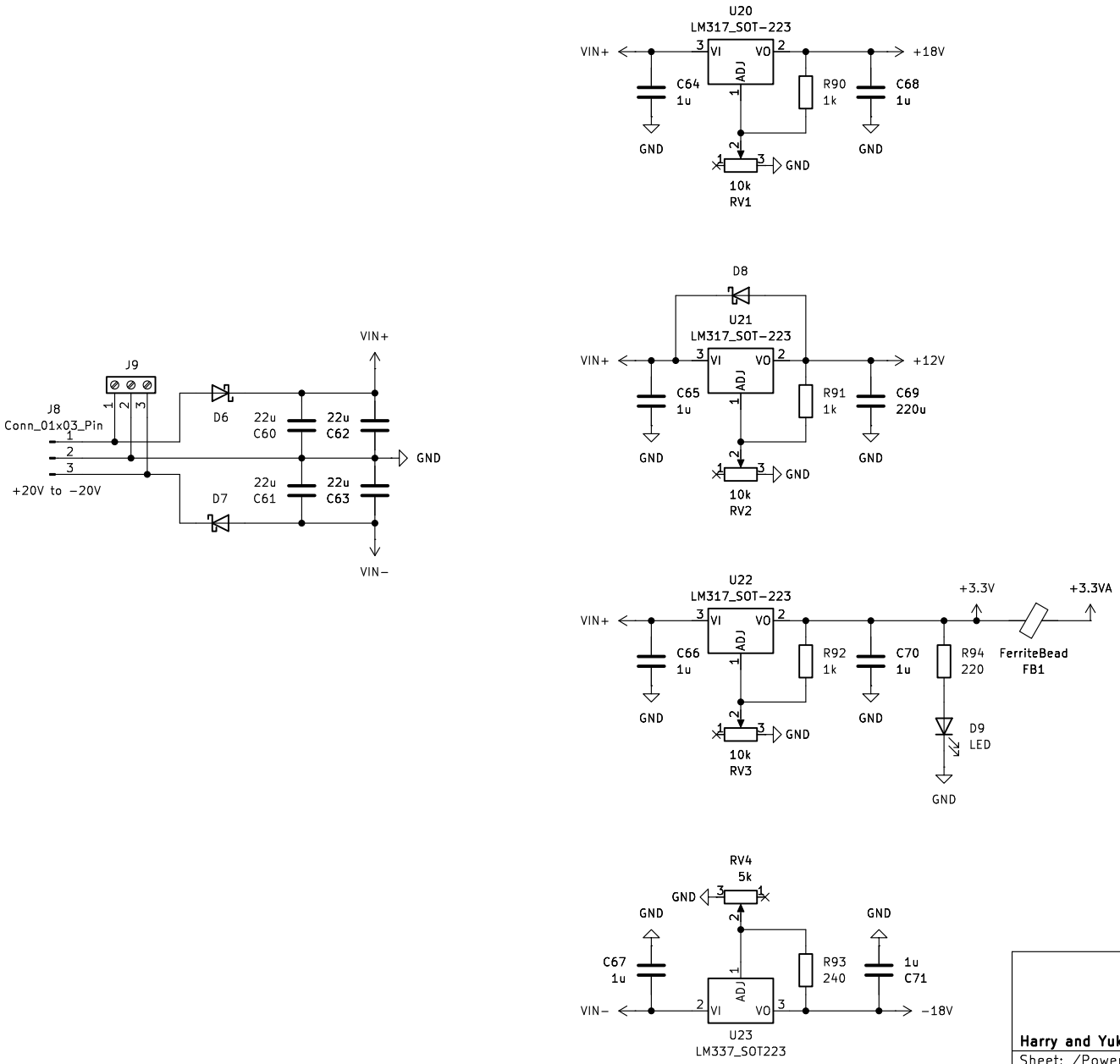

Harry and Yuki – EEE3 Instrumentation

Sheet: /Power/
File: Power.kicad_sch

Title: Power Supply

Size: A4	Date: 2026-03-02	**Rev: 1.0**
KiCad E.D.A. 9.0.7		Id: 8/8